ELECTRICAL SPECIFICATIONS	
MODEL NO.	FFCC-C1-400-C5-G-ALU-LZ-FUS
SUPPLY VOLTAGE	600VAC
SUPPLY CURRENT	400A RMS
PHASE/FREQ	3Ø, 3W, 60Hz
ASSEMBLY SCCR	65kA RMS SYM.
ENCL. RATING	TYPE 3R
STANDARDS	ETL 1008

REVISIONS			
REV.	DESCRIPTION	DATE	APPR.
1.3	Issued for Approval	2023-11-17	BRAD B
1.4	Class J Fuses	2024-04-16	Andrew C
1.4	Issued for Construction	2025-07-11	BRAD B

NOTES

1. NEUTRAL IS ABSENT.
2. 3PH, 3W SYSTEM.
3. (3) CLASS-J 400A POWER FUSES INCLUDED IN SCOPE OF SUPPLY.
4. DE-ENERGIZE ALL CIRCUITS PRIOR TO SERVICING OF POWER FUSES.
5. DISCONNECTING MEANS MUST BE PROVIDED IN ORDER TO DE-ENERGIZE THE POWER FUSES.
6. ETL1008 LISTED.

1C- 750MCM 1/2" - 2 HOLE
COMPRESSION LUGS/PH +
1C-#1/0AWG 1/2" - 2 HOLE
COMPRESSION GROUND LUGS

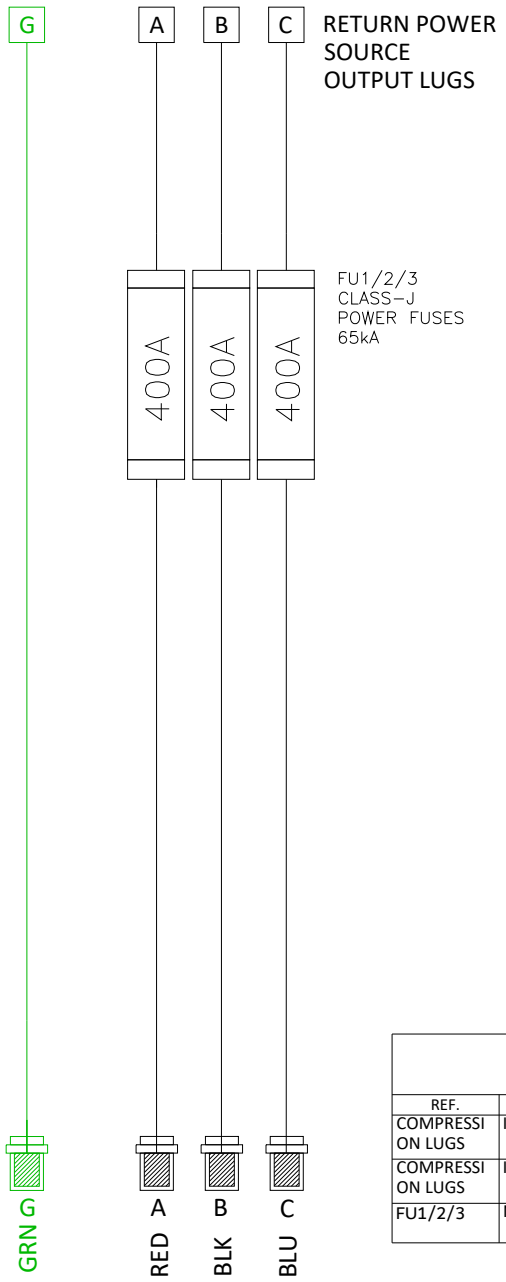

400A TEMP. GEN. CONNECTION
CABINET ASSEMBLY
E16 CAMLOK CONNECTORS
MALE-1C/PHASE +1GRD

BILL OF MATERIALS

REF.	MFR	P/N	DESCRIPTION	QTY	REV
COMPRESSION LUGS	ILSCO	ALND-1/0-12-134	#1/0AWG, 2 HOLES, 1/2" BOLT SIZE, 1-3/4" HOLE SPACING, LONG BARREL	1	A
COMPRESSION LUGS	ILSCO	ALND-700/750-12-134	750MCM, 2 HOLES, 1/2" BOLT SIZE, 1-3/4" HOLE SPACING, LONG BARREL	3	A
FU1/2/3	MERSEN	A4J400	400A CLASS-J POWER FUSES, 65kA, CYLINDRICAL BODY	3	A

Foxfab Power Solutions
2579-188 ST
SURREY, BC V3Z2A1
(604) 460-9310
WWW.FOXFAB.COM

THIS DRAWING IS COPYRIGHT AND IS THE PROPERTY OF FOXFAB POWER SOLUTIONS INC. IT MAY NOT BE COPIED, REPRODUCED OR USED IN WHOLE OR IN PART IN ANY WAY WITHOUT WRITTEN PERMISSION OF FOXFAB POWER SOLUTIONS INC. USE OF THIS DRAWING IS PERMITTED ONLY FOR THE SPECIFIC PURPOSE FOR WHICH IT WAS ISSUED BY FOXFAB POWER SOLUTIONS INC. AND IT MUST BE RETURNED IMMEDIATELY UPON REQUEST.

TITLE
FFCC-C1-400-C5-G-ALU-LZ-FUS
400A FUSED TEMP. GEN CONNECTION CABINET

JOB NO. J15302	CLIENT	
DRAWN BY ANDREW C	CHECKED BY –	APPROVED BRAD B
MODEL NO.		REV. 1.4
DRAWING NO.		SHEET NO. 01

REVISION				
REV.	ZONE	DESCRIPTION	DATE	DRAWNBY

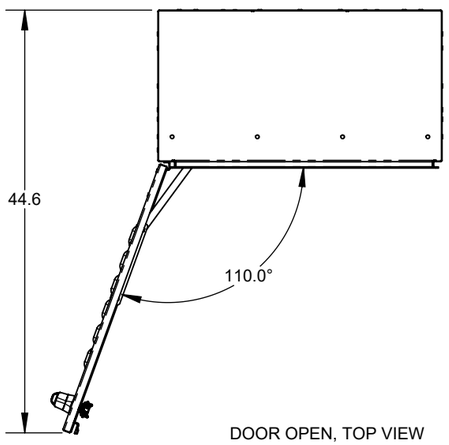

DOOR OPEN, TOP VIEW

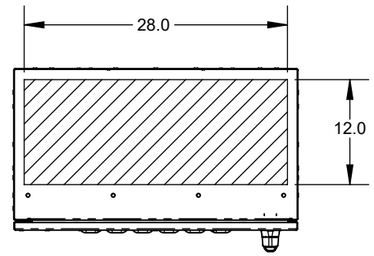

TOP VIEW

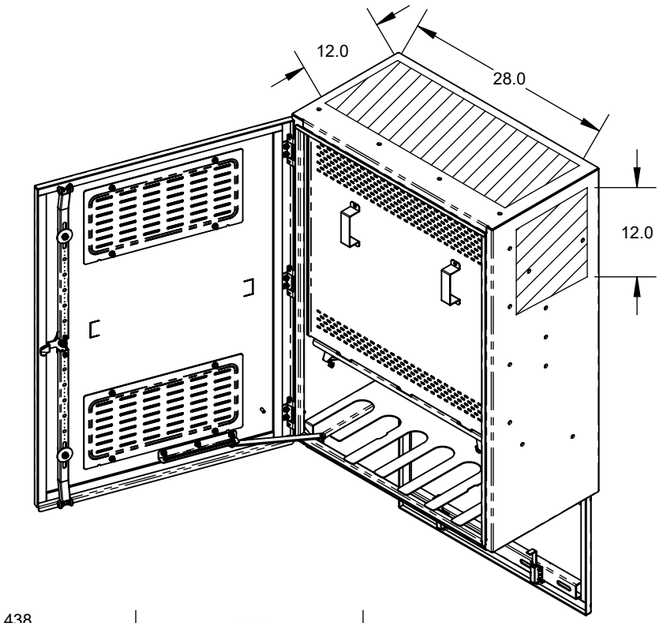

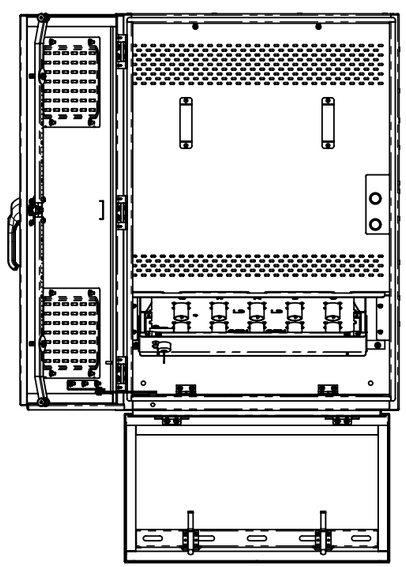

DOOR OPEN, FRONT VIEW

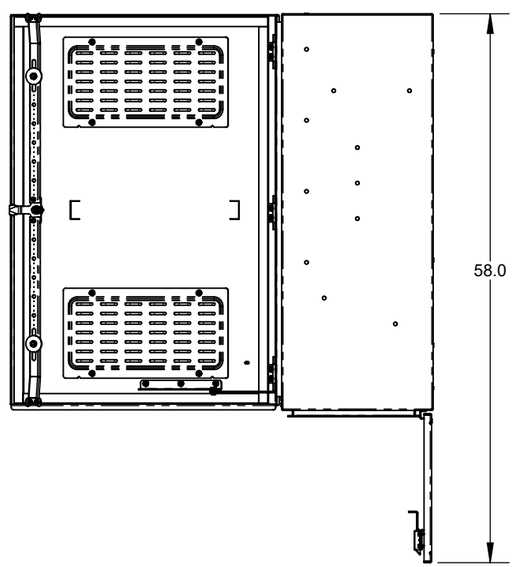

DOOR OPEN, SIDE VIEW

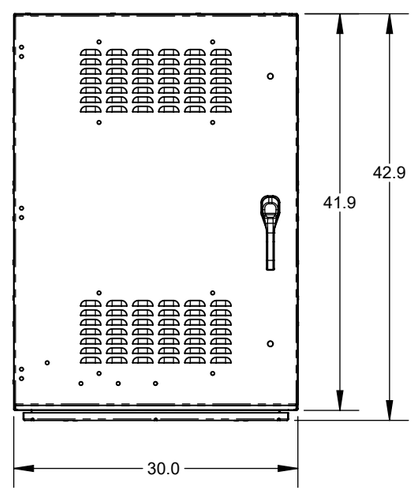

FRONT VIEW

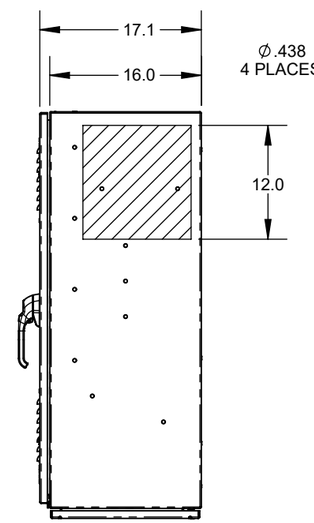

SIDE VIEW

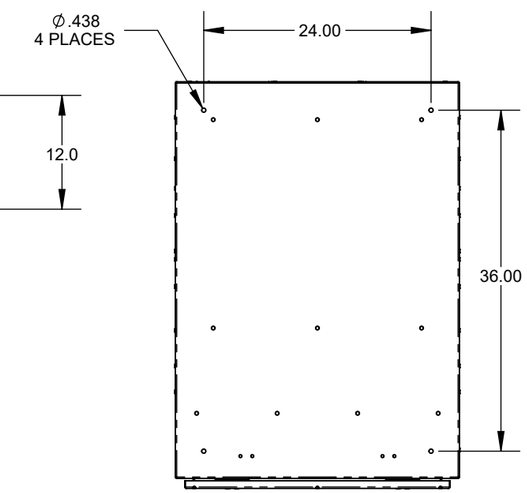

REAR VIEW

BOTTOM VIEW

ESTIMATED WEIGHT: 155 POUNDS

MATERIAL 152.42003-10041.SLDASM" lbs PER NOTES	DRAWN BY GC	SAVED ON 2022-10-18	Foxfab Power Solutions 2579-188 ST. SURREY, BC V3Z 2A1 (604) 460 - 9310 WWW.FOXFAB.COM
FINISH PC PER NOTES	BD - / TOP DIE - / BOTTOM DIE -		TITLE: FFCC-C1-400-C5-G-ALU-LZ-FUS
PROPRIETARY AND CONFIDENTIAL THE INFORMATION CONTAINED IN THIS DRAWING IS THE SOLE PROPERTY OF FOXFAB POWER SOLUTIONS. ANY REPRODUCTION IN PART OR AS A WHOLE WITHOUT THE WRITTEN PERMISSION OF FOXFAB POWER SOLUTIONS IS PROHIBITED.	UNLESS OTHERWISE SPECIFIED: DIMENSIONS ARE IN INCHES TOLERANCES: X ± 2 X.X ± .5 X.XX ± .2 X.XXX ± .1 ANGULAR ±1.5 INTERPRET DIM AND TOL. PER: **ASME Y14.5**		THIRD ANGLE: / SIZE **B** / SCALE 1:24 / REV A
			ITEM NO. S155 / DWG. NO. 003-10155-LAY / SHEET 1 OF 1